Graphical reasoning in symmetric monoidal categories

Lucas Dixon, University of Edinburgh

Joint work with: Ross Duncan and Aleks Kissinger, University of Oxford

5 Nov 2009

Outline

- Motivation: characterise processes (quantum computation)
- Symmetric Monoidal Categories and Graphs
- Example with boolean circuits
- Extended graphs, Matching and Plugging
- Inductive patterns of graphs with !-boxes

Symmetric Monoidal Categories (SMC)

- C is a monoidal category: it has associative and unital bifunctor $\otimes$:
  - $\otimes$ operation on objects: $X \otimes Y$; and specific identity object I
    ($\otimes$ is associative and has I as identify)
  - $\otimes$ operation on morphisms: if $f : X \to Y$ and $g : X' \to Y'$
    then $(f \otimes g) : (X \otimes X') \to (Y \otimes Y')$
    (associative and has identity id)
- *Braided*: has 'braiding' isomorphisms: $\sigma_{X,Y} : X \otimes Y \to Y \otimes X$.
- *Symmetric*: $\sigma_{X,Y} \circ \sigma_{Y,X} = id$.

Typed Graphs = SMC

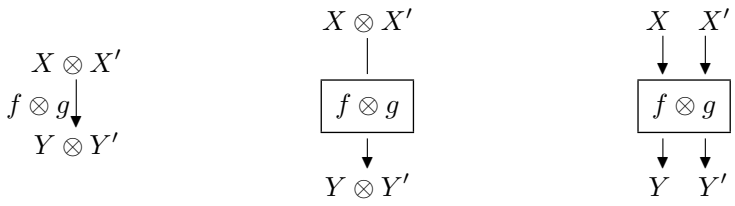

Category Theory $\Rightarrow$ swap edges and vertices $\Rightarrow$ tensor is spacial

- already the generic way to draw processes, e.g. circuits:
  Vertices are operations and **Edges are objects**,
- Coherence conditions provide correctness for graphical notation:
  equality for graph = equality for SMC

Graphical Representation

- We can express the bifunctoriality of $\otimes$ and the symmetric braiding of σ as:

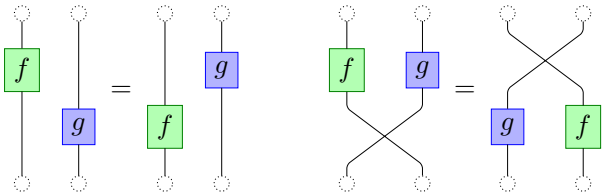

Example: Boolean Circuits

Values: $B = \{0, 1\}$; Operations: $N : B \otimes B \to B$, $C : B \to B \otimes B$, $\perp : B \to 1$

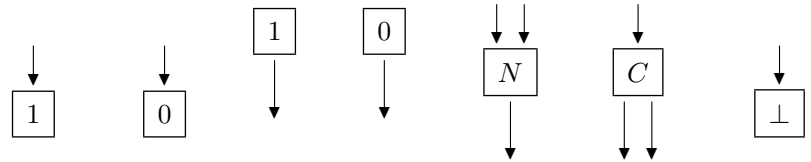

Out 1 Out 0 In 1 In 0 Nand Copy Ignore

Symmetric monoidal categories composition of diagrams; need additional equational structure to describe equivalences between circuits...

Example: Boolean Circuit Graphical Equations

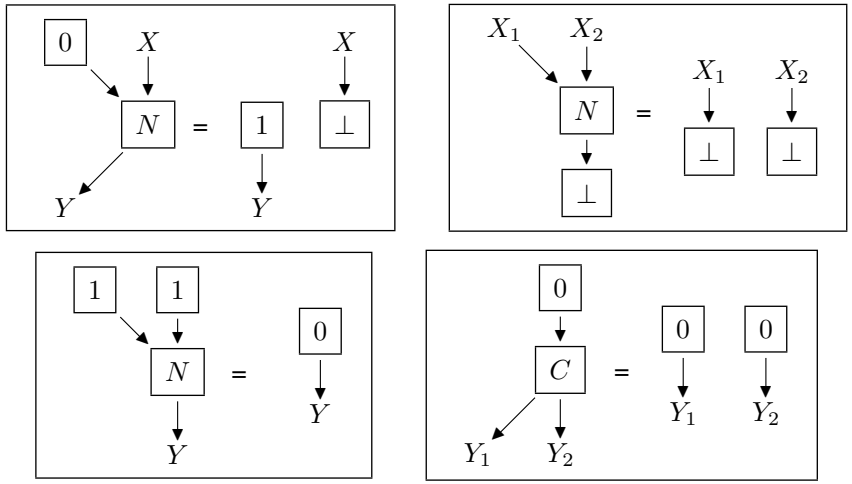

Graphical Reasoning:

- Goal:

  to develop suitable formalism for reasoning about equational structure in symmetric monoidal categories.

- Based on *SMC as graphs*.
- Incident edges to a vertex define its *type*
- 'subject reduction': *rewriting preserves types*
- *rewriting and plugging commute* (plugging doesn't break matching)
- reason with common *inductive structures*

Graphs

- *Directed graph*: $E \underset{t}{\overset{s}{\rightrightarrows}} V$

  Any number of edges are allowed between vertices (not a binary relation)

- $G = (G_E, G_V, s, t)$; $E = G_E$; $V = G_V$; in$(v) := t^{-1}(v)$; out$(v) := s^{-1}(v)$
- *graph morphism* (graphs: G, H) $f_E : E_G \to E_H$ and $f_V : V_G \to V_H$ where:

$$s_H \circ f_E = f_V \circ s_G$$
$$t_H \circ f_E = f_V \circ t_G$$

Extended Open Graphs

- *Extended open graph:* (G, X)
  $X \subseteq V$ (exterior); Int $G = V \setminus X$ (interior)

- *Exterior vertices define an interface* (hierarchical)
  a subgraph has the same character as a vertex

- *Morphism of open graphs:* $f : (G, G_X) \to (H, H_X)$ (only map to H_X from G_X)
  $\forall v \in V_G.\ f_V(v) \in \partial H \Rightarrow v \in \partial G$

- *Strict Morphism:* $f : (G, G_X) \to (H, H_X)$ (no extra interior edges)
  $\forall e \in E_H.\ s_H(e) \in f_V(\text{Int}\, G) \vee t_H(e) \in f_V(\text{Int}\, G) \Rightarrow \exists e' \in E_G.\ f_E(e') = e.$

- *There is also a topological interpretation*: morphisms as continuous maps

Matching for Extended Graphs

- *Relaxed subgraph*: cut and relaxed
  - *cut an edge*: introduce two-clique new exterior vertices
  - *cut a vertex*: throw away data, make exterior
  - *relax a vertex*: makes incidence 1 'loving' vertex-cliques of exterior vertex
  - *love*: relation between cliques of exterior vertices

- $G \leq H$ (G *matches* H) = $\exists f$ which is an open graph morphism from a relaxed G to a relaxed subgraph of H, such that (it is an *exact embedding*):

  1. f is a strict love morphism; (locally preserves type)
  2. f_E and f_V are injective; (mapped 1-1 in subgraph)
  3. $\forall v \in V_G.\ f_V(v) \in \partial H \Leftrightarrow v \in \partial G$ (exact X map)

Matching Example 1

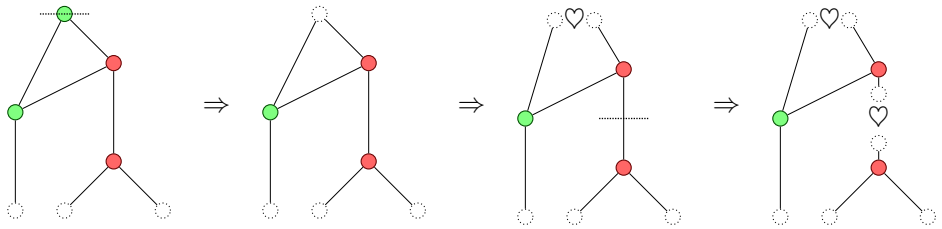

cut vertex relax vertex cut edge

Matching Example 2

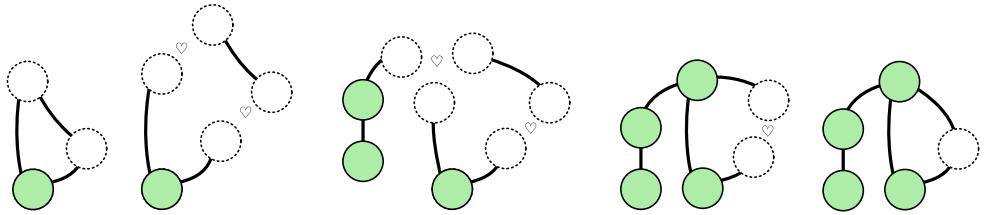

G $\quad$ $relax(G)$ $\quad$ H' an open-subgraph of $relax(H)$ $\quad$ $relax(H)$ $\quad$ H

- Efficient algorithm by graph traversal:
  - relaxation built in
  - cuts implicit by left-over graph.

Composing Graphs: a picture

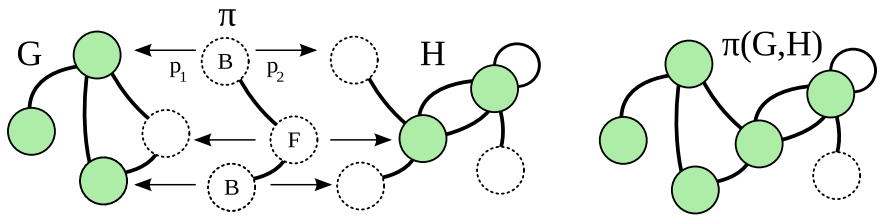

Plugging of G and H via the two-sided e-graph π with embeddings p_1 and p_2.

Composing Graphs: Plugging

- $((\pi, \pi_X), (F, B))$ a graph, π, with $\pi_V = \pi_X$ and partition of π_V into F and B
- Pair of embeddings: $p_1 : (\pi, \pi_X) \to (G, G_X)$ and $p_2 : (\pi, \pi_X) \to (H, H_X)$ such that $p_1(F) \subseteq X$ and $p_2(B) \subseteq Y$
- *plugging*, $\pi^{p_1}_{p_2}(G, H)$, defined by pushout:

$$\begin{tikzcd} \pi \arrow[r, hook, "p_1"] \arrow[d, hook, "p_2"'] & G \arrow[d] \\ H \arrow[r, dashed] & \pi^{p_1}_{p_2}(G,H) \arrow[ul, phantom, "\ulcorner"] \end{tikzcd}$$

(minimal graph matched by both G and H where the two π's are identified)

- Properties: $\pi(G, H) \cong \pi(H, G)$; $G \leq_e \pi(G, H)$ and $H \leq_e \pi(G, H)$; $K \leq_e G$ implies $K \leq_e \pi(G, H)$;

Representing Inductive Families of Graphs

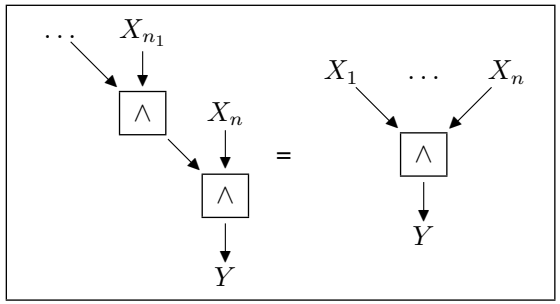

- Want a higher level language to capture such repeated structure; allow rewriting etc

!-Box Graphs

!-Box Graphs = (G, B) where B is a disjoint set of subsets of G_V
(draw a box around elements of each member of B)

!-Box Matching : G matches H: ($H \in G$ closed under:

copy : copy subgraph including incident edges some number of times
drop : removes the !-box, keep the contents.
merge : combines two !-boxes: $\{B_1, B_2, ...\} \to \{(B_1 \cup B_2), ...\}$.

Semantics: $[\![G]\!]_!$ subset of matches that have no !-boxes.

!-Box Graphs: Example

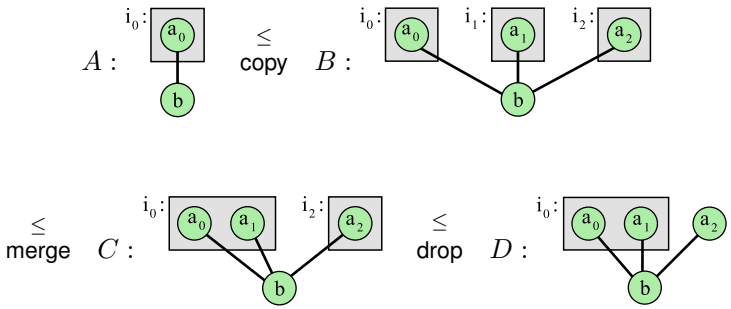

Example showing how A matches D

Conclusions

- Symmetric monoidal categories have a natural graphical presentation
- Many processes form SMCs with extra equational structure
- High level language for processes motivates !-boxes to capture inductive structure (ellipsis notation)
- Initial goal was to reason about quantum information; also has applications to traditional circuits
- Developed a formalism for equational reasoning over graph-based representations of symmetric monoidal categories
- Implementation: `http://dream.inf.ed.ac.uk/projects/quantomatic`